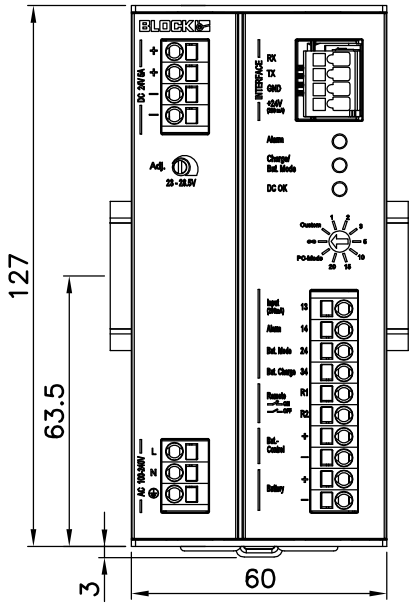
127
63.5
3
60
BLOCK
DC 24V 6A
AC 100-240V
Adj.
23 - 28.5V
INTERFACE
RX
TX
GND
+5.0V
Alarm
Charge/
Bat. Mode
DC OK
Custom
PC-Mode
Bat.
Temp.
Alarm
Bat. Mode
Bat. Charge
Input
Bat.
Output
Relay
13
14
24
34
R1
R2

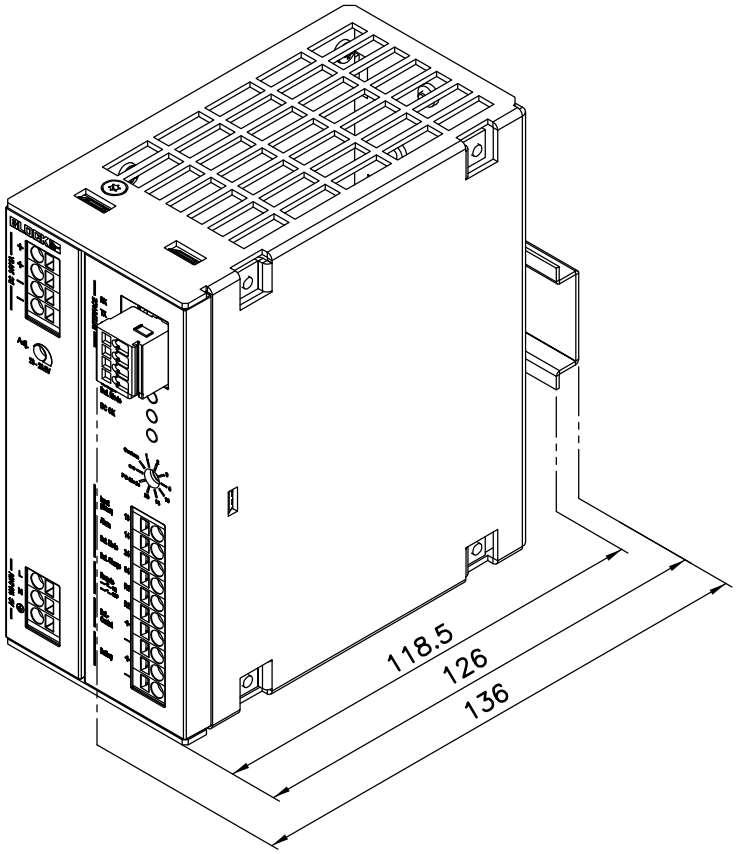
118.5
126
136