BLOCK Transformatoren-Elektronik GmbH
D - 27283 Verden/Aller

Datum: 15.05.03
gez.: Schröder
gepr.: Friedrich

Datasheet

Änderungs-index	0	a			
Archiviert in Labor-EDV am:	15.05.2008				

Grund/Art der Änderung	Datum	Name	Datum	Name
a Marking updated	21.03.12	Fischer	29.03.12	

Type	: 3~ Load reactor
BV - Nr.	: MDB 400/13
Core Type	: 3UI 75/41,5
Voltage Range	: 3x 400V (Phase - Phase)
Current Rating	: 3x 13A
Inductance at current rating	: 3x 0,9mH
Frequency Range	: 0 - 120Hz
Switching Frequency	: 2 - 6kHz
Connection Mode	: III
Safety Class	: Prepared for use in class I equipment
Protection Index	: IP 00
Insulation Class	: F
Max. Ambient Temperature (At rated conditions)	: 40°C
Approvals	: -
Standards	: EN 61 558 part 1 with part 2-20
HV-Test Voltage	: Winding - Core : 3000V
Dimensions (A x B x C x F x G)	: 155mm x 95mm x 170mm x 135mm x 92mm
Mounting Dimensions (D x E)	: 130mm x 71mm (for screw M5)
Terminal	: Screw Terminal 4mm²
Terminal (PE)	: M4 screw with wire holding plate
Notice	: Technical specifications are typical, they can vary due to material and production tolerances.

Marking:

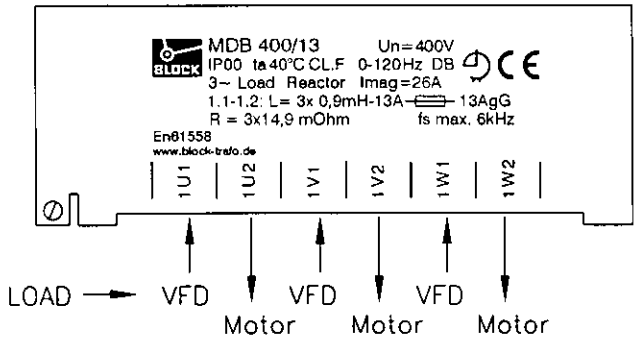

Connection Diagram:

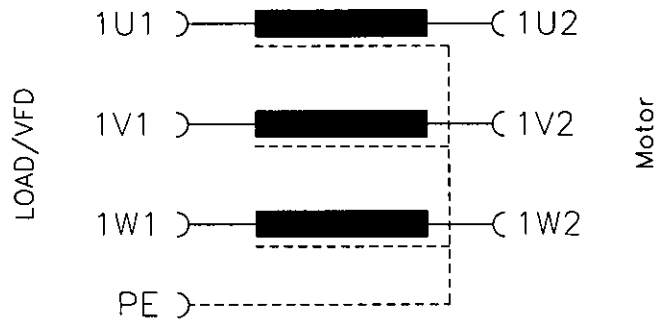

Construction:

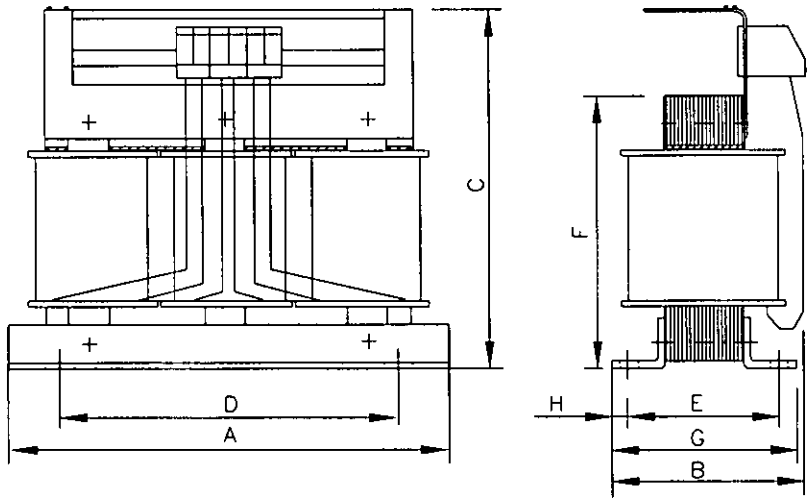

Observe Protection Clause to ISO 16016

Subject to change